STOD03AS

Dual DC-DC converter for powering AMOLED displays

Features

- Step-up and inverter converters
- Operating input voltage range from 2.5 V to 4.5 V
- Synchronous rectification for both DC-DC converters
- Minimum 200 mA output current
- 4.6 V fixed positive output voltage
- Programmable negative voltage by S_{WIRE} from -2.4 V to -5.4 V at 100 mV steps
- Typical efficiency: 85%
- Pulse skipping mode in light load condition
- 1.5 MHz PWM mode control switching frequency
- Enable pin for shutdown mode
- Low quiescent current in shutdown mode
- Soft-start with inrush current protection
- Overtemperature protection
- Temperature range: -40 °C to 85 °C
- True-shutdown mode
- Fast discharge outputs of the circuits after shutdown
- Short-circuit protection
- Package DFN12L (3 x 3 mm) 0.6 mm height

Applications

- Active matrix AMOLED power supply
- Cellular phones
- Camcorders and digital still cameras
- Multimedia players

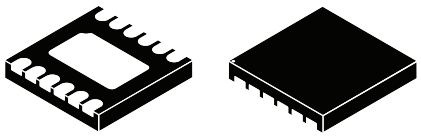

DFN12L (3 x 3 mm)

Description

The STOD03AS is a dual DC-DC converter with short-circuit protection for AMOLED display panels. It integrates a step-up and an inverting DC-DC converter making it particularly suitable for battery operated products, in which the major concern is overall system efficiency. It works in pulse skipping mode during light load conditions and PWM-MODE at 1.5 MHz frequency for medium/high load conditions. The high frequency allows the value and size of external components to be reduced. The Enable pin allows the device to be turned off, therefore reducing the current consumption to less than 1 µA. The negative output voltage can be programmed by an MCU through a dedicated pin which implements single-wire protocol. Soft-start with controlled inrush current limit and thermal shutdown are integrated functions of the device.

Table 1. Device summary

Order code	Positive voltage	Negative voltage	Package	Packaging
STOD03ASTPUR	4.6V	-2.4V to -5.4V	DFN12L (3 x 3 mm)	3000 parts per reel

Contents

1 Schematic 3

2 Pin configuration 5

3 Maximum ratings 6

4 Electrical characteristics 7

5 Typical performance characteristics 10

6 Detailed description 12

6.1 S_{WIRE} 12

6.1.1 S_{WIRE} features and benefits 12

6.1.2 S_{WIRE} protocol 12

6.1.3 S_{WIRE} basic operations 12

6.2 Negative output voltage levels 12

7 Application information 14

7.1 External passive components 14

7.1.1 Inductor selection 14

7.1.2 Input and output capacitor selection 14

7.2 Recommended PCB layout 15

8 Detailed description 17

8.1 General description 17

8.1.1 Multiple operation modes 17

8.1.2 Pulse skipping operation 17

8.1.3 Discontinuous conduction mode 17

8.1.4 Continuous conduction mode 17

8.1.5 Enable pin 18

8.1.6 Soft-start and inrush current limiting 18

8.1.7 Undervoltage lockout 18

8.1.8 Overtemperature protection 18

8.1.9 Short-circuit protection 18

8.1.10 Fast discharge 18

9 Package mechanical data 20

10 Revision history 23

1 Schematic

Figure 1. Application schematic

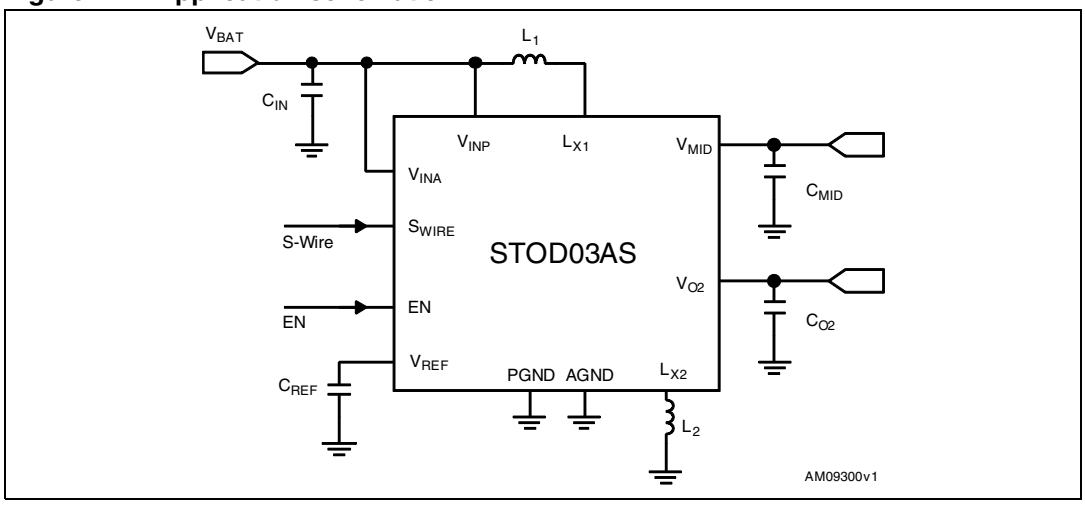

Table 2. Typical external components

Comp.	Manufacturer	Part number	Value	Size	Ratings
L_1 (1)	CoilCraft	LPS4012-472ML	4.7µH	4.0 x 4.0 x 1.2	±20%, I = 1.7 A, R = 0.175Ω
	Murata	LQH3NPN4R7MJ0		3.0 x 3.0 x 1.1	±20%, I = 1.1 A, R = 0.156Ω
	SEMCO	CIG22B4R7MNE		2.5 x 2.0 x 1.0	±20%, I = 1.1 A, R = 0.300Ω
	ABCO	LPF2810T-4R7M		2.8 x 2.8 x 1.0	±20%, I = 0.85 A, R = 0.33Ω
	ABCO	LPF2807T-4R7M		2.8 x 2.8 x 0.7	±20%, I = 0.70 A, R = 0.44Ω
L_2 (2)	CoilCraft	LPS4012-472ML	4.7µH	4.0 x 4.0 x 1.2	±20%, I = 1.7 A, R = 0.175Ω
	Murata	LQH3NPN4R7MJ0		3.0 x 3.0 x 1.1	±20%, I = 1.1 A, R = 0.156Ω
	TOKO	DFE252012C1239AS-H4R7N		2.5 x 2.0 x 1.2	±30%, I = 1.2 A, R = 0.252Ω
	ABCO	LPF3510T-4R7M		3.5 x 3.5 x 1.0	±20%, I = 0.83 A, R = 0.25Ω
	TDK	VLF4014AT-4R7M1R1		3.7 x 3.5 x 1.4	±20%, I = 1.1 A, R = 0.140Ω
C_{IN}	Murata	GRM219R61A106KE44	2 x 10µF	0805	±10%, X5R, 10V
	Taiyo Yuden	LMK212BJ106KD-T		0805	±10%, X5R, 10V
C_{MID}	Murata	GRM219R61A106KE44	10µF	0805	±10%, X5R, 10V
	Taiyo Yuden	LMK212BJ106KD-T		0805	±10%, X5R, 10V
C_{O2}	Murata	GRM219R61A106KE44	2 x 10µF	0805	±10%, X5R, 10V
	Taiyo Yuden	LMK212BJ106KD-T		0805	±10%, X5R, 10V
C_{REF}	Murata	GRM185R60J105KE26	1µF	0603	±10%, X5R, 6.3V
	Taiyo Yuden	JMK107BJ105KK-T		0603	±10%, X5R, 6.3V

1. A 200 mA load can be provided with inductor saturation current as a minimum of 0.5 A.
2. At -5.4 V, a 200 mA load can be provided with inductor saturation current as a minimum of 1 A. See *Section 7.1.1*.

Note: All the above components refer to the typical application performance characteristics. Operation of the device is not limited to the choice of these external components. Inductor values ranging from 3.3 µH to 6.8 µH can be used together with the STOD03AS.

Figure 2. Block schematic

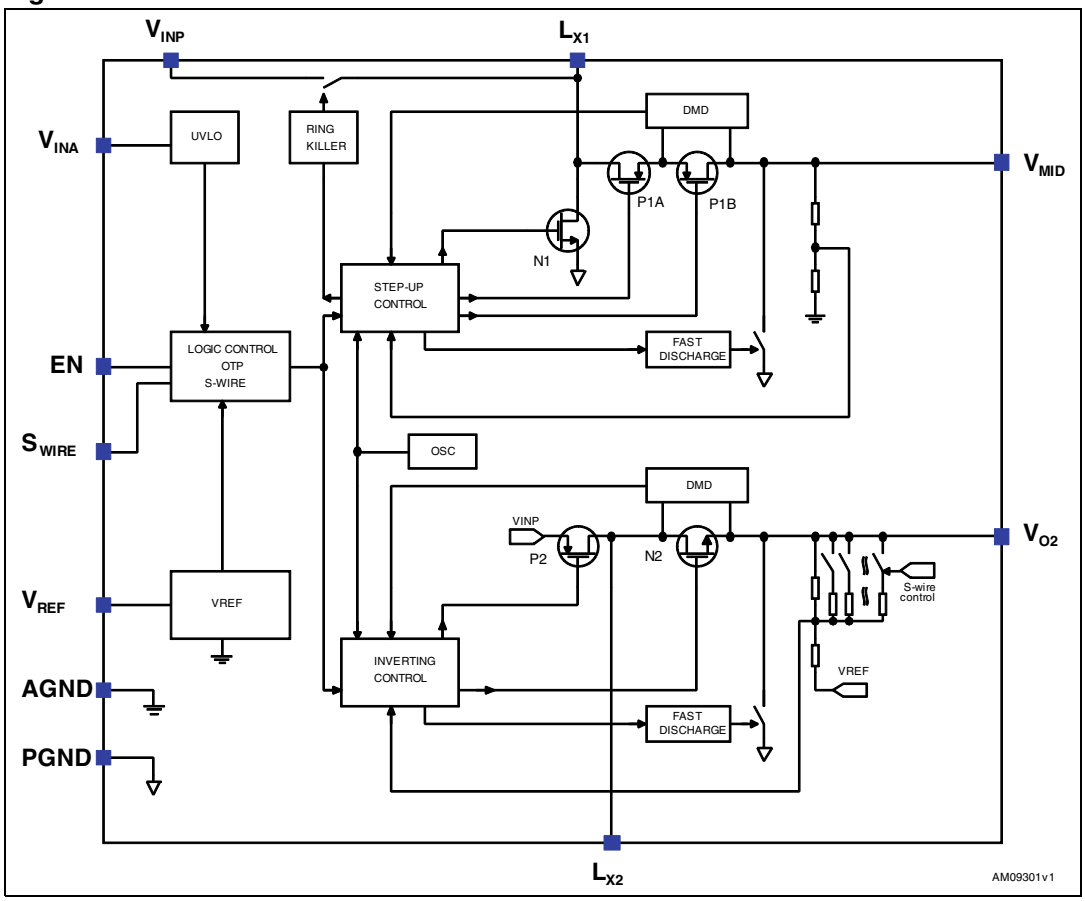

2 Pin configuration

Figure 3. Pin configuration (top view)

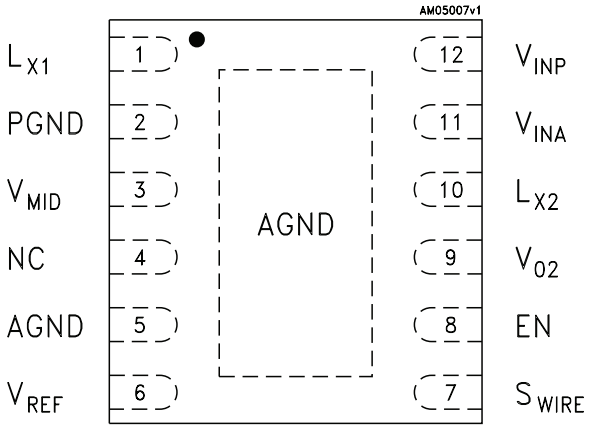

Table 3. Pin description

Pin name	Pin n°	Description
Lx_1	1	Switching node of the step-up converter
PGND	2	Power ground pin
V_{MID}	3	Step-up converter output voltage (4.6V)
NC	4	Not internally connected
AGND	5	Signal ground pin. This pin must be connected to the power ground pin
V_{REF}	6	Voltage reference output. 1µF bypass capacitor must be connected between this pin and AGND
S_{WIRE}	7	Negative voltage setting pin
EN	8	Enable control pin. ON = V_{INA}. When pulled low it puts the device in shutdown mode
V_{O2}	9	Inverting converter output voltage (Default - 4.9V)
Lx_2	10	Switching node of the inverting converter
$V_{IN\ A}$	11	Analogic input supply voltage
$V_{iN\ P}$	12	Power input supply voltage
	Exposed pad	Internally connected to AGND. Exposed pad must be connected to AGND and PGND in the PCB layout in order to guarantee proper operation of the device

3 Maximum ratings

Table 4. Absolute maximum ratings

Symbol	Parameter	Value	Unit
V_{INA}, V_{INP}	DC supply voltage	-0.3 to 6	V
EN, S_{WIRE}	Logic input pins	-0.3 to 4.6	V
IL_{X2}	Inverting converter switching current	Internally limited	A
L_{X2}	Inverting converter switching node voltage	- 10 to V_{INP} + 0.3	V
V_{O2}	Inverting converter output voltage	- 10 to AGND + 0.3	V
V_{MID}	Step-up converter and LDO output voltage	-0.3 to 6	V
L_{X1}	Step-up converter switching node voltage	-0.3 to V_{MID} + 0.3	V
IL_{X1}	Step-up converter switching current	Internally limited	A
V_{REF}	Reference voltage	-0.3 to 3	V
P_D	Power dissipation	Internally limited	mW
T_{STG}	Storage temperature range	-65 to 150	°C
T_J	Maximum junction temperature	150	°C
ESD	ESD protection HBM	2	kV

Note: Absolute maximum ratings are those values beyond which damage to the device may occur. Functional operation under these conditions is not implied.

Table 5. Thermal data

Symbol	Parameter	Value	Unit
R_{thJA}	Thermal resistance junction-ambient	33	°C/W
R_{thJC}	Thermal resistance junction-case (FR-4 PCB) (1)	2.12	°C/W

1. The package is mounted on a 4-layer (2S2P) JEDEC board as per JESD51-7.

4 Electrical characteristics

T_J = 25 °C, V_{INA} = V_{INP} = 3.7 V, $I_{MID,O2}$ = 30 mA, C_{IN} = 2 x 10 µF, C_{MID} = 10 µF, C_{O2} = 2 x 10 µF, C_{REF} = 1 µF, L1 = L2 = 4.7 µH, V_{EN} = 2 V, V_{MID} = 4.6 V, V_{O2}= -4.9 V unless otherwise specified.

Table 6. Electrical characteristics

Symbol	Parameter	Test conditions	Min.	Typ.	Max.	Unit
General section						
V_{INA}, V_{INP}	Supply input voltage		2.3	3.7	4.5	V
UVLO_H	Undervoltage lockout HIGH	V_{INA} rising		2.22	2.25	V
UVLO_L	Undervoltage lockout LOW	V_{INA} falling	1.9	2.18		V
I_V_I	Input current	No load condition		1.7	2.1	mA
I_{Q_SH}	Shutdown current	V_{EN}=GND T_J=-40°C to +85°C			1	µA
V_{EN} H	Enable high threshold	V_{INA}=2.5V to 4.5V, T_J=-40°C to +85°C	1.2			V
V_{EN} L	Enable low threshold				0.4	
I_{EN}	Enable input current	V_{EN}=V_{INA}=4.5V T_J=-40°C to +85°C			1	µA
f_S	Switching frequency	PWM mode	1.2	1.5	1.7	MHz
$D1_{MAX}$	Step-up maximum duty cycle	No load		87		%
$D2_{MAX}$	Inverting maximum duty cycle	No load		87		%
η	Total system efficiency	$I_{MID,O2}$=10 to 30mA, V_{MID}=4.6V, V_{O2}=-4.9V		80		%
		$I_{MID,O2}$=30 to 150mA, V_{MID}=4.6V, V_{O2}=-4.9V		85		%
V_{REF}	Voltage reference	I_{REF}=10µA	1.216	1.228	1.240	V
I_{REF}	Voltage reference current capability	At 98.5% of no load reference voltage	100			µA
Step-up converter section						
V_{MID}	Positive voltage total variation	V_{INA}=V_{INP}=2.5V to 4.5V; I_{MID}=5mA to 150mA, I_{O2} no load, T_J=25°C	4.55	4.6	4.65	V
	Temperature accuracy	V_{INA}=V_{INP}=3.7V; I_{MID}=5mA; I_{O2} no load; T_J=-40°C to +85°C		±0.5		%
$\Delta V_{MID\ LT}$	Line transient	$V_{INA,P}$=3.5V to 3.0V, I_{MID}=100mA; T_R=T_F=50µs		-12		mV

Table 6. Electrical characteristics (continued)

Symbol	Parameter	Test conditions	Min.	Typ.	Max.	Unit
ΔV_{MIDT}	Load transient regulation	I_{MID}=3 to 30mA and I_{MID}=30 to 3mA, T_R=T_F=30µs		±20		mV
		I_{MID}=10 to 100mA and I_{MID}=100 to 10mA, T_R=T_F=30µs		±25		mV
V_{MID-PP}	TDMA noise line transient regulation	I_{MID}=5 to 100mA; $V_{INA,P}$ =2.9V to 3.4V; F=200Hz; T_R=T_F=50µs; I_{O2} no load		±20		mV
$I_{MID\ MAX}$	Max. step-up load current	$V_{INA,P}$=2.9V to 4.5V	200			mA
$I\text{-}L_{1MAX}$	Step-up inductor peak current	V_{MID} 10% below of nominal value	0.9		1.1	A
$R_{DSON}P1$	P-channel static drain-source ON resistance	$V_{INA,P}$=3.7V, I_{SW}=100mA		1.0	2.0	Ω
$R_{DSON}N1$	N-channel static drain-source ON resistance	$V_{INA,P}$=3.7V, I_{SW}=100mA		0.4	1.0	Ω
Inverting converter section						
V_{O2}	Output negative voltage range	31 different values set by the S_{WIRE} pin (see *Section 6.1.2*)	-5.4		-2.4	V
	Output negative voltage total variation on default value	V_{INA}=V_{INP}=2.5V to 4.5V; I_{O2}=5mA to 150mA, I_{MID} no load, T_J=25°C	-4.97	-4.9	-4.83	V
	Temperature accuracy	V_{INA}=V_{INP}=3.7V; I_{O2}=5mA, I_{MID} no load, T_J=-40°C to +85°C		±0.5		%
$\Delta V_{O2\ LT}$	Line transient	$V_{INA,P}$=3.5V to 3.0V, I_{O2}=100mA, T_R=T_F=50µs		+12		mV
ΔV_{O2T}	Load transient regulation	I_{O2}=3 to 30mA and I_{O2}=30 to 3mA, T_R=T_F=100µs		±20		mV
	Load transient regulation	I_{O2}=10 to 100mA and I_{O2}=100 to 10mA, T_R=T_F=100µs		±25		mV
V_{O2-PP}	TDMA noise line transient regulation	I_{O2}=5 to 100mA; $V_{INA,P}$ =2.9V to 3.4V; F=200Hz; T_R=T_F=50µs; I_{MID} no load		±25		mV
I_{O2}	Maximum inverting output current	$V_{INA,P}$=2.9V to 4.5V	-200			mA
$I\text{-}L_{2MAX}$	Inverting peak current	V_{O2} below 10% of nominal value	-1.2		-0.9	A
$R_{DSON}P2$	P-channel static drain-source ON resistance	$V_{INA,P}$=3.7V, I_{SW}=100mA		0.42		Ω
$R_{DSON}N2$	N-channel static drain-source ON resistance	$V_{INA,P}$=3.7V, I_{SW}=100mA		0.43		Ω

Table 6. Electrical characteristics (continued)

Symbol	Parameter	Test conditions	Min.	Typ.	Max.	Unit
Thermal shutdown						
OTP	Overtemperature protection			140		°C
OTP_{HYST}	Overtemperature protection hysteresis			15		°C
Discharge resistor						
R_{DIS}	Resistor value	No load		400		Ω
T_{DIS}	Discharge time	No load, V_{MID}-V_{O2} at 10% of nominal value		8		ms

5 Typical performance characteristics

V_{O2} = - 4.9 V; T_A = 25 °C; See *Table 1* for external components used in the tests below.

Figure 4. Efficiency vs. input voltage

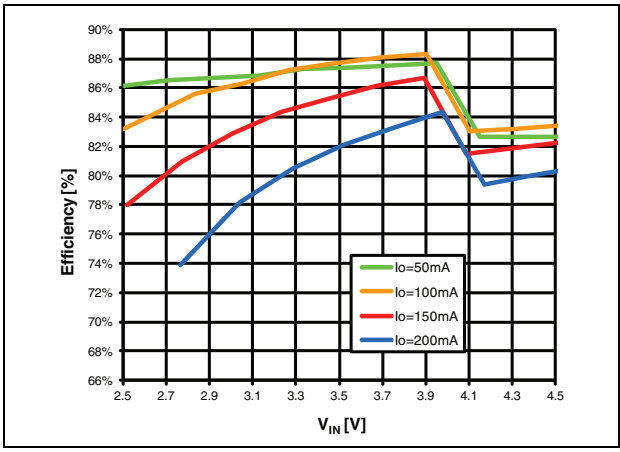

Figure 5. Efficiency vs. output current

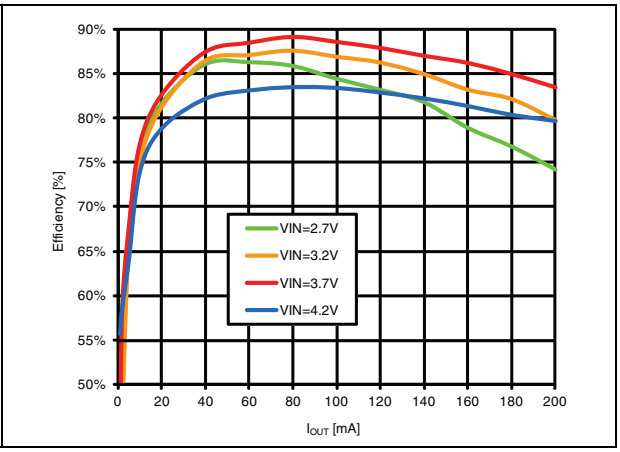

Figure 6. Input current vs. V_{IN} no load

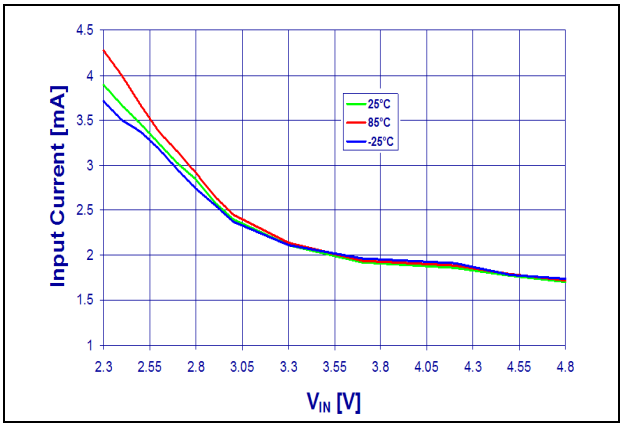

Figure 7. Max. power output vs. V_{IN}, T_A = 25 °C

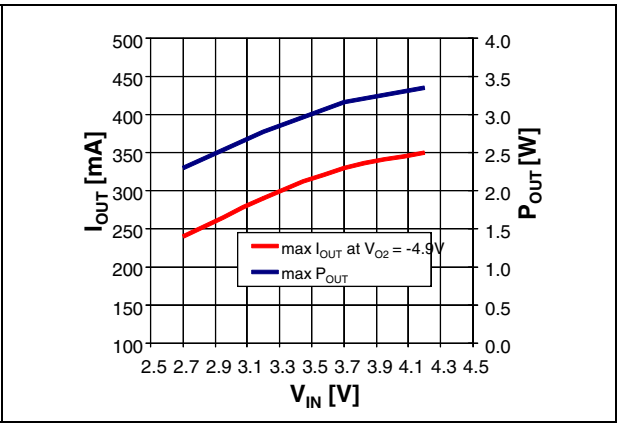

Figure 8. Fast discharge V_{IN} = 3.7 V, no load

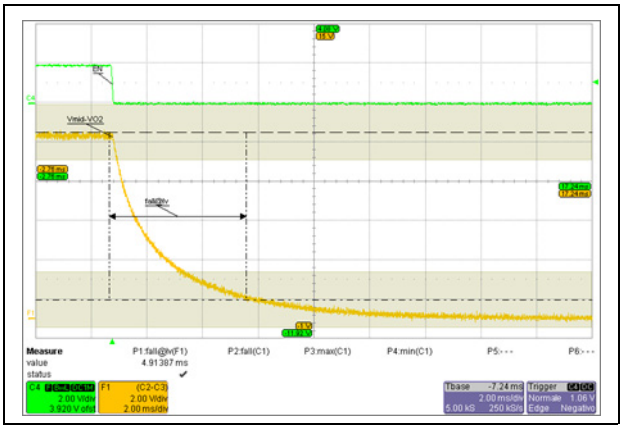

Figure 9. Startup and inrush V_{IN} = 3.7 V, no load

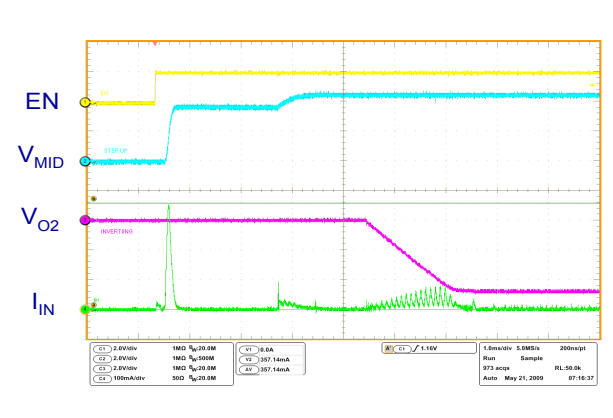

Figure 10. Step-up CCM operation

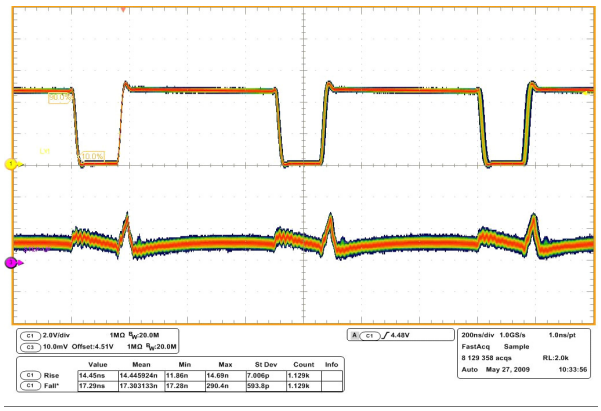

$V_{EN} = V_{INA} = V_{INP} = 3.7$ V, $I_{MID} = 100$ mA, $T_A = 25$ °C

Figure 11. Inverting CCM operation

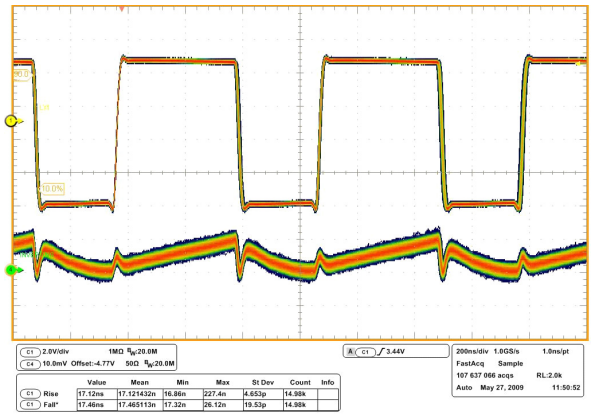

$V_{EN} = V_{INA} = V_{INP} = 3.7$ V, $I_{O2} = 100$ mA, $T_A = 25$ °C

Figure 12. Line transient

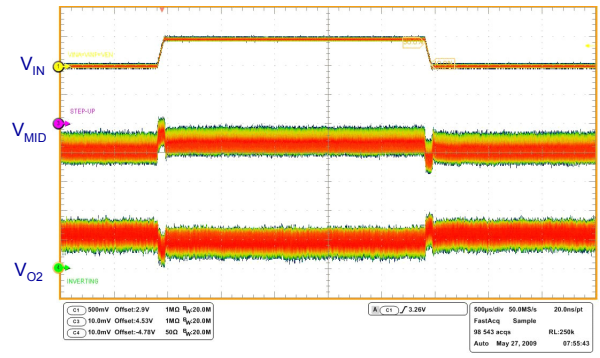

$V_{INA} = V_{INP} = 2.9$ to 3.4 V, $I_{MID,O2} = 100$ mA, $T_R = T_F = 50$ µs

Figure 13. Output voltage vs. input voltage $I_O = 200$ mA, $V_{O2} = -4.9$ V

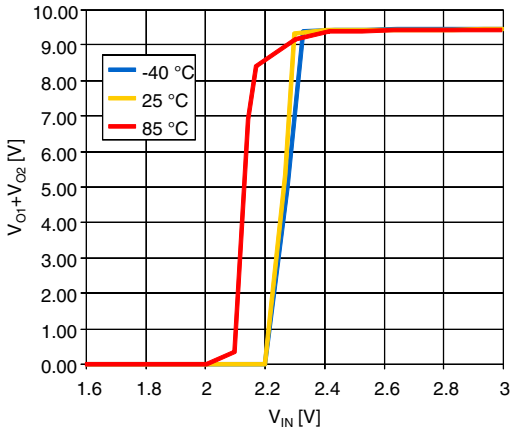

6 Detailed description

6.1 S_{WIRE}

- Protocol: to digitally communicate over a single cable with single-wire components
- Single-wire's 3 components:

1. an external MCU
2. wiring and associated connectors
3. the STOD03AS device with a dedicated single-wire pin.

6.1.1 S_{WIRE} features and benefits

- Fully digital signal
- No handshake needed
- Protection against glitches and spikes though an internal low pass filter acting on falling edges
- Uses a single wire (plus analog ground) to accomplish both communication and power control transmission
- Simplified design with an interface protocol that supplies control and signaling over a single-wire connection to set the output voltages.

6.1.2 S_{WIRE} protocol

- Single-wire protocol uses conventional CMOS/TTL logic levels (maximum 0.6 V for logic “zero” and a minimum 1.2 V for logic “one”) with operation specified over a supply voltage range of 2.5 V to 4.5 V
- Both master (MCU) and slave (STOD03AS) are configured to permit bit sequential data to flow only in one direction at a time; master initiates and controls the device
- Data is bit-sequential with a START bit and a STOP bit
- Signal is transferred in real time
- System clock is not required; each single-wire pulse is self-clocked by the oscillator integrated in the master and is asserted valid within a frequency range of 250 kHz (maximum).

6.1.3 S_{WIRE} basic operations

- The negative output voltage levels are selectable within a wide range (steps of 100 mV)
- The device can be enabled / disabled via S_{WIRE} in combination with the Enable pin.

6.2 Negative output voltage levels

Table 7. Negative output voltage levels

Pulse	V_{O2}	Pulse	V_{O2}	Pulse	V_{O2}
1	-5.4	11	-4.4	21	-3.4
2	-5.3	12	-4.3	22	-3.3
3	-5.2	13	-4.2	23	-3.2
4	-5.1	14	-4.1	24	-3.1
5	-5.0	15	-4.0	25	-3.0
6 (1)	-4.9	16	-3.9	26	-2.9
7	-4.8	17	-3.8	27	-2.8
8	-4.7	18	-3.7	28	-2.7
9	-4.6	19	-3.6	29	-2.6
10	-4.5	20	-3.5	30	-2.5
				31	-2.4

1. Default output voltage.

Table 8. Enable and S_{WIRE} operation table (1)

Enable	S_{WIRE}	Action
Low	Low	Device off
Low	High	Negative output set by S_{WIRE}
High	Low	Default negative output voltage
High	High	Default negative output voltage

1. The Enable pin must be set to AGND while using the S_{WIRE} function.

7 Application information

7.1 External passive components

7.1.1 Inductor selection

Magnetic shielded low ESR power inductors must be chosen as the key passive components for switching converters.

For the step-up converter an inductance between 4.7 µH and 6.8 µH is recommended. For the inverting stage the suggested inductance ranges from 3.3 µH to 4.7 µH.
It is very important to select the right inductor according to the maximum current the inductor can handle to avoid saturation. The step-up and the inverting peak current can be calculated as follows:

Equation 1

$$I_{PEAK-BOOST} = \frac{V_{MID} \times I_{OUT}}{\eta 1 \times VIN_{MIN}} + \frac{VIN_{MIN} \times (V_{MID} - VIN_{MIN})}{2 \times V_{MID} \times fs \times L1}$$

Equation 2

$$I_{PEAK-INVERTING} = \frac{(VIN_{MIN} - VO2_{MIN}) \times I_{OUT}}{\eta 2 \times VIN_{MIN}} + \frac{VIN_{MIN} \times VO2_{MIN}}{2 \times (VO2_{MIN} - VIN_{MIN}) \times fs \times L2}$$

where

V_{MID}: step-up output voltage, fixed at 4.6 V;

V_{O2}: inverting output voltage including sign (minimum value is the absolute maximum value);

I_O: output current for both DC-DC converters;

V_{IN}: input voltage for the STOD03AS;

f_s: switching frequency. Use the minimum value of 1.2 MHz for the worst case;

$\eta 1$: efficiency of step-up converter. Typical value is 0.85;

$\eta 2$: efficiency of inverting converter. Typical value is 0.75.

The negative output voltage can be set via S_{WIRE} at - 5.4 V. Accordingly, the inductor peak current, at the maximum load condition, increases. A proper inductor, with a saturation current as a minimum of 1 A, is preferred.

7.1.2 Input and output capacitor selection

It is recommended to use X5R or X7R low ESR ceramic capacitors as input and output capacitors in order to filter any disturbance present in the input line and to obtain stable operation for the two switching converters. A minimum real capacitance value of 6 µF must be guaranteed for C_{MID} and C_{O2} in all conditions. Considering tolerance, temperature variation and DC polarization, a 10 µF, 10 V ±10% capacitor as C_{MID} and 2 x 10 µF, 10 V ±10% as C_{O2}, can be used to achieve the required 6 µF.

7.2 Recommended PCB layout

The STOD03AS is high frequency power switching device and therefore requires a proper PCB layout in order to obtain the necessary stability and optimize line/load regulation and output voltage ripple.

Analog input (V_{INA}) and power input (V_{INP}) must be kept separated and connected together at the C_{IN} pad only. The input capacitor must be as close as possible to the IC.

In order to minimize the ground noise, a common ground node for power ground and a different one for analog ground must be used. In the recommended layout, the AGND node is placed close to C_{REF} ground while the PGND node is centered at C_{IN} ground. They are connected by a separated layer routing on the bottom through vias.

The exposed pad is connected to AGND through vias.

Figure 14. Top layer and silk-screen (top view, not to scale)

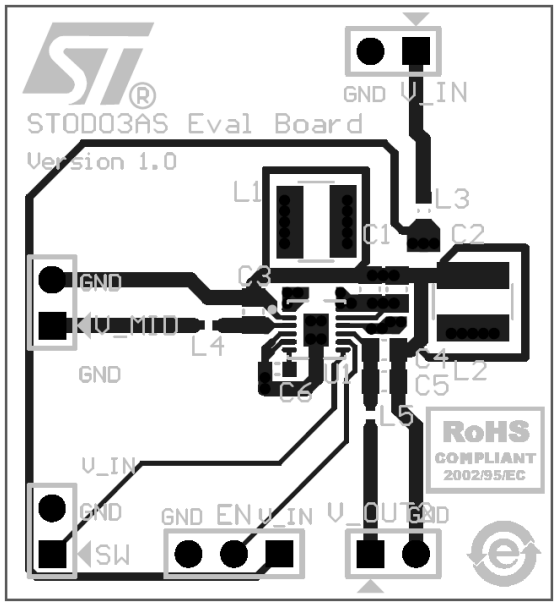

Figure 15. Bottom layer and silk-screen (top view, not to scale)

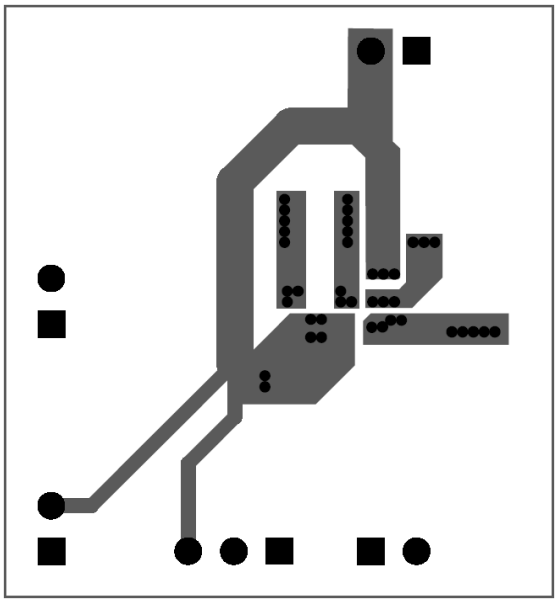

8 Detailed description

8.1 General description

The STOD03AS is a high efficiency dual DC-DC converter which integrates a step-up and inverting power stage suitable for supplying AMOLED panels. Thanks to the high level of integration it needs only 6 external components to operate and it achieves very high efficiency using a synchronous rectification technique for each of the two DC-DC converters.

The controller uses an average current mode technique in order to obtain good stability and precise voltage regulation in all possible conditions of input voltage, output voltage, and output current. In addition, the peak inductor current is monitored in order to avoid saturation of the coils.

The STOD03AS implements a power saving technique in order to maintain high efficiency at very light load and it switches to PWM operation as the load increases in order to guarantee the best dynamic performances and low noise operation.

The STOD03AS avoids battery leakage thanks to the true-shutdown feature and it is self protected from overtemperature. Undervoltage lockout and soft-start guarantee proper operation during startup.

8.1.1 Multiple operation modes

Both the step-up and the inverting stage of the STOD03AS operate in three different modes: pulse skipping (PS), discontinuous conduction mode (DCM) and continuous conduction mode (CCM). It switches automatically between the three modes according to input voltage, output current, and output voltage conditions.

8.1.2 Pulse skipping operation

The STOD03AS works in pulse skipping mode when the load current is below some tens of mA. The load current level at which this way of operation occurs depends on input voltage only for the step-up converter and on input voltage and negative output voltage (V_{O2}) for the inverting converter.

8.1.3 Discontinuous conduction mode

When the load increases above a few mA, the STOD03AS enters DCM operation. In order to obtain this type of operation the controller must avoid the inductor current going negative. The discontinuous mode detector (DMD) blocks sense the voltage across the synchronous rectifiers (P1B for the step-up and N2 for the inverting) and turn off the switches when the voltage crosses a defined threshold which, in turn, represents a certain current in the inductor. This current can vary according to the slope of the inductor current which depends on input voltage, inductance value, and output voltage.

8.1.4 Continuous conduction mode

At medium/high output loads, the STOD03AS enters full CCM at constant switching frequency mode for each of the two DC-DC converters.

8.1.5 Enable pin

The device operates when the EN pin is set high. If the EN pin is set low, the device stops switching, and all the internal blocks are turned off. In this condition the current drawn from V_{INP}/V_{INA} is below 1 µA in the whole temperature range. In addition, the internal switches are in an OFF state so the load is electrically disconnected from the input, this avoids unwanted current leakage from the input to the load.

When the EN is pulled high, the P1B switch is turned on for 100 µs. In normal operation, during this time, apart of a small drop due to parasitic resistance, V_{MID} reaches V_{IN}.
If, after this 100 µs, V_{MID} stays below V_{IN}, the P1B is turned off and stays off until a new pulse is applied to the EN. This mechanism avoids the STOD03AS starting if a short-circuit is present on V_{MID}.

8.1.6 Soft-start and inrush current limiting

After the EN pin is pulled high, or after a suitable voltage is applied to V_{INP}, V_{INA} and EN, the device initiates the startup phase.

As a first step, the C_{MID} capacitor is charged and the P1B switch implements a current limiting technique in order to keep the charge current below 400 mA. This avoids the battery overloading during startup.

After V_{MID} reaches the V_{INP} voltage level, the P1B switch is fully turned on and the soft-start procedure for the step-up is started. After around 2 ms the soft-start for the inverting is started. The positive and negative voltages are under regulation at around 6 ms after the EN pin is asserted high.

8.1.7 Undervoltage lockout

The undervoltage lockout function avoids improper operation of the STOD03AS when the input voltage is not high enough. When the input voltage is below the UVLO threshold the device is in shutdown mode. The hysteresis of 50mV avoids unstable operation when the input voltage is close to the UVLO threshold.

8.1.8 Overtemperature protection

An internal temperature sensor continuously monitors the IC junction temperature. If the IC temperature exceeds 140 °C, typical, the device stops operating. As soon as the temperature falls below 125 °C, typical, normal operation is restored.

8.1.9 Short-circuit protection

When short-circuit occurs, the device is able to detect the voltage difference between V_{IN} and V_{MID}. Overshoots on LX1 are limited, decreasing the inductor current. After that, the output stages of the device are turned off. This status is maintained, avoiding current flowing to the load. A new ENABLE transition is needed to restart the device. During startup the short-circuit protection is active.

8.1.10 Fast discharge

When ENABLE turns from high to low level, the device goes into shutdown mode and LX1 and LX2 stop switching. Then, the discharge switch between V_{MID} and V_{IN} and the switch between V_{O2} and GND turn on and discharge the positive output voltage and negative output voltage. When the output voltages are discharged to 0 V, the switches turn off and the outputs are high impedance.

9 Package mechanical data

In order to meet environmental requirements, ST offers these devices in different grades of ECOPACK® packages, depending on their level of environmental compliance. ECOPACK specifications, grade definitions and product status are available at: *www.st.com*. ECOPACK is an ST trademark.

Table 9. DFN12L (3 x 3) mechanical data

Dim.	mm.			inch.		
	Min.	Typ.	Max.	Min.	Typ.	Typ.
A	0.51	0.55	0.60	0.020	0.022	0.024
A1	0	0.02	0.05	0	0.001	0.002
A3		0.20			0.008	
b	0.18	0.25	0.30	0.007	0.010	0.012
D	2.85	3	3.15	0.112	0.118	0.124
D2	1.87	2.02	2.12	0.074	0.080	0.083
E	2.85	3	3.15	0.112	0.118	0.124
E2	1.06	1.21	1.31	0.042	0.048	0.052
e		0.45			0.018	
L	0.30	0.40	0.50	0.012	0.016	0.020

Figure 16. DFN12L (3 x 3) drawing

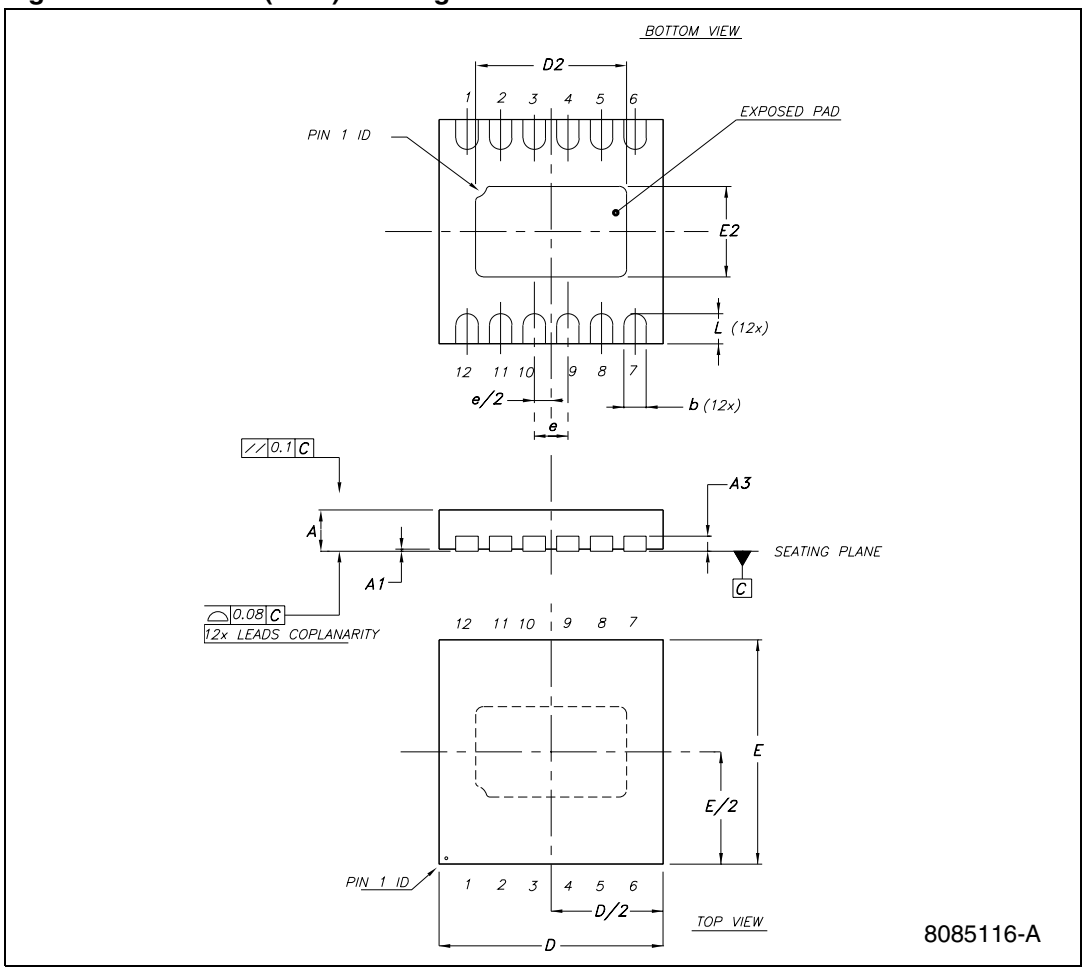

Figure 17. DFN12L (3 x 3 mm) footprint recommended data

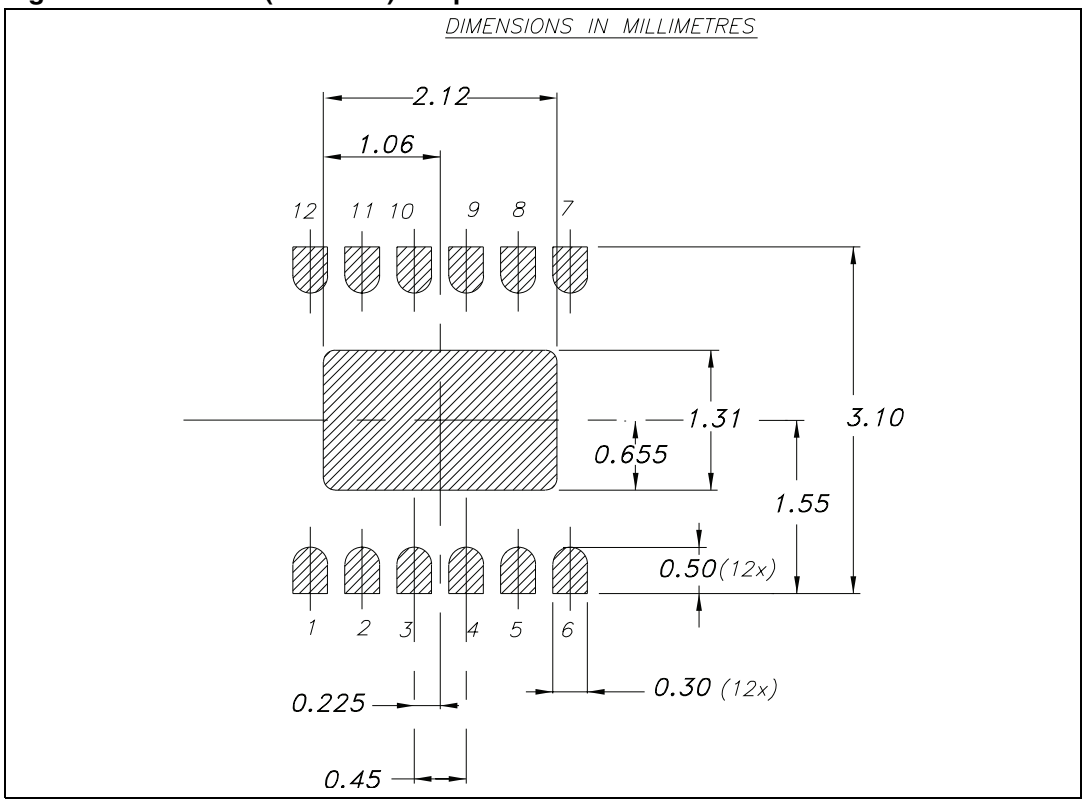

10 Revision history

Table 10. Document revision history

Date	Revision	Changes
20-Dec-2011	1	Initial release.

Please Read Carefully:

Information in this document is provided solely in connection with ST products. STMicroelectronics NV and its subsidiaries (“ST”) reserve the right to make changes, corrections, modifications or improvements, to this document, and the products and services described herein at any time, without notice.

All ST products are sold pursuant to ST’s terms and conditions of sale.

Purchasers are solely responsible for the choice, selection and use of the ST products and services described herein, and ST assumes no liability whatsoever relating to the choice, selection or use of the ST products and services described herein.

No license, express or implied, by estoppel or otherwise, to any intellectual property rights is granted under this document. If any part of this document refers to any third party products or services it shall not be deemed a license grant by ST for the use of such third party products or services, or any intellectual property contained therein or considered as a warranty covering the use in any manner whatsoever of such third party products or services or any intellectual property contained therein.

UNLESS OTHERWISE SET FORTH IN ST’S TERMS AND CONDITIONS OF SALE ST DISCLAIMS ANY EXPRESS OR IMPLIED WARRANTY WITH RESPECT TO THE USE AND/OR SALE OF ST PRODUCTS INCLUDING WITHOUT LIMITATION IMPLIED WARRANTIES OF MERCHANTABILITY, FITNESS FOR A PARTICULAR PURPOSE (AND THEIR EQUIVALENTS UNDER THE LAWS OF ANY JURISDICTION), OR INFRINGEMENT OF ANY PATENT, COPYRIGHT OR OTHER INTELLECTUAL PROPERTY RIGHT.

UNLESS EXPRESSLY APPROVED IN WRITING BY TWO AUTHORIZED ST REPRESENTATIVES, ST PRODUCTS ARE NOT RECOMMENDED, AUTHORIZED OR WARRANTED FOR USE IN MILITARY, AIR CRAFT, SPACE, LIFE SAVING, OR LIFE SUSTAINING APPLICATIONS, NOR IN PRODUCTS OR SYSTEMS WHERE FAILURE OR MALFUNCTION MAY RESULT IN PERSONAL INJURY, DEATH, OR SEVERE PROPERTY OR ENVIRONMENTAL DAMAGE. ST PRODUCTS WHICH ARE NOT SPECIFIED AS "AUTOMOTIVE GRADE" MAY ONLY BE USED IN AUTOMOTIVE APPLICATIONS AT USER’S OWN RISK.

Resale of ST products with provisions different from the statements and/or technical features set forth in this document shall immediately void any warranty granted by ST for the ST product or service described herein and shall not create or extend in any manner whatsoever, any liability of ST.

ST and the ST logo are trademarks or registered trademarks of ST in various countries.

Information in this document supersedes and replaces all information previously supplied.

The ST logo is a registered trademark of STMicroelectronics. All other names are the property of their respective owners.

© 2011 STMicroelectronics - All rights reserved

STMicroelectronics group of companies

Australia - Belgium - Brazil - Canada - China - Czech Republic - Finland - France - Germany - Hong Kong - India - Israel - Italy - Japan - Malaysia - Malta - Morocco - Philippines - Singapore - Spain - Sweden - Switzerland - United Kingdom - United States of America

www.st.com